Date: Tuesday, 10/02/2009 11:09:05 AM
User: Julie Dawson

Process Sheet

Customer	: CU-DAR001 Dart Helicopters Services	**Drawing Name**	: END PLATE
Job Number	: 45665		
Estimate Number	: 11681		
P.O. Number	:	**Part Number**	: D2875
This Issue	: 10/02/2009 **S.O. No.** :	**Drawing Number**	: D2875 REV A
Prsht Rev.	: NC	**Project Number**	: N/A
First Issue	: / / **Type** : MACHINED PARTS	**Drawing Revision**	: A
Previous Run	:	**Material**	:
Written By	:	**Due Date**	: 20/02/2009 **Qty:** 6 **Um:** Each
Checked & Approved By	: JD 09.02.10		
Comment	: Est:B 00.01.11 Added note at step one, level 2, re-format EC		

Additional Product

Job Number:

Seq. #:	Machine Or Operation:	Description :
1.0	M5052H32S063	5052-H32 .063 Sheet

Comment: Qty.: 0.0642 sf(s)/Unit Total : 0.3849 sf(s)
5052-H32 .063 Sheet
(M5052H32S063)
5052-H32 (QQ-A-250/8) or 6061-T6 (QQ-A-250/11) 0.063 thick.
Batch: 107276 HB 9-2-11

2.0	SHEAR	WATERSET A/A HB 9-2-11	SHEAR

Comment: SHEAR
Shear blanks: 3.035" +0.000/-0.010 X 2.90 +0.030/-0.010
Grain along 3.035"

3.0	HAAS1	HAAS CNC VERTICAL MACHINING #1

Comment: HAAS CNC VERTICAL MACHINING #1
Machine per folio D2734
Flat pattern is the same as D2734
Deburr

4.0	QC2	INSPECT PARTS AS THEY COME OFF MACHINE

HB 9-2-11

Comment: INSPECT PARTS AS THEY COME OFF MACHINE

5.0	QC8	SECOND CHECK

Comment: SECOND CHECK J 09/02/11

Dart Aerospace Ltd

W/O:		WORK ORDER CHANGES					
DATE	STEP	PROCEDURE CHANGE	By	Date	Qty	Approval Chief Eng / Prod Mgr	Approval QC Inspector
09/02/10	2	Water jet → cut as per dwg → deburr (permement change) 09/02/10	HB 9-3-12				09/02/11

Part No: _____ PAR #: _____ Fault Category: _____ NCR: Yes No DQA: _____ Date: _____

Resolution: _____ Disposition: _____ QA: N/C Closed: _____ Date: _____

NCR:		WORK ORDER NON-CONFORMANCE (NCR)						
DATE	STEP	Description of NC Section A	Corrective Action Section B			Verification Section C	Approval Chief Eng	Approval QC Inspector
			Initial Chief Eng	Action Description Chief Eng	Sign & Date			

NOTE: Date & initial all entries

Date: Tuesday, 10/02/2009 11:09:06 AM
User: Julie Dawson

Process Sheet

Customer: CU-DAR001 Dart Helicopters Services **Drawing Name:** END PLATE

Job Number: 45665 **Part Number:** D2875

Job Number:

Seq. #:	Machine Or Operation:	Description :
6.0	BRAKE NC	NC BRAKE

Comment: NC BRAKE
Form per drawing D2875

09/02/13 (11)

7.0	QC5	INSPECT WORK TO CURRENT STEP

Comment: INSPECT WORK TO NEXT STEP

09/03/04

8.0	PACKAGING 1	PACKAGING RESOURCE #1

Comment: PACKAGING RESOURCE #1
Identify and Stock
Location: WA

09.03.04 11

9.0	QC21	FINAL INSPECTION/W/O RELEASE

Comment: FINAL INSPECTION/W/O RELEASE

09/03/05

Job Completion

09-03-04

Form: rprocess

Dart Aerospace Ltd

W/O:		WORK ORDER CHANGES					
DATE	**STEP**	**PROCEDURE CHANGE**	**By**	**Date**	**Qty**	**Approval** Chief Eng / Prod Mgr	**Approval** QC Inspector

Part No: _____ **PAR #:** _____ **Fault Category:** _____ **NCR:** Yes No **DQA:** _____ **Date:** _____

Resolution: _____ **Disposition:** _____ **QA: N/C Closed:** _____ **Date:** _____

NCR:		WORK ORDER NON-CONFORMANCE (NCR)						
DATE	**STEP**	**Description of NC** Section A	**Corrective Action** Section B			**Verification** Section C	**Approval** Chief Eng	**Approval** QC Inspector
			Initial Chief Eng	**Action Description** Chief Eng	**Sign & Date**			

NOTE: Date & initial all entries

DART AEROSPACE LTD	Work Order:	45665
Description: END PLATE	Part Number:	D2875
Inspection Dwg: D2875 , Rev: A		Page 1 of 1

FIRST ARTICLE INSPECTION CHECKLIST

[X] First Article [X] Prototype

Drawing Dimension	Tolerance	Actual Dimension	Accept	Reject	Method of Inspection	Comments
2.900	+/- .010	2.894	✓			
3.035	+/- .010	3.037	✓			
.063	+/- .010	.063	✓			

Measured by:	AB
Date:	9-2-11

Audited by:	S
Date:	09/02/11

Prototype Approval:	
Date:	

Rev	Date	Change	Revised by	Approved
A		New Issue	KJ/JLM	

DESIGN KE	DRAWN BY KE	DART AEROSPACE LTD HAWKESBURY, ONTARIO, CANADA	
CHECKED GP	APPROVED	DRAWING NO. D2875	REV. A SHEET 1 OF 1
DATE 99.10.20		TITLE END PLATE	SCALE 1:1
A	99.10.20	NEW ISSUE	

RELEASED
99.11.02 KE

QA COPY ISSUED

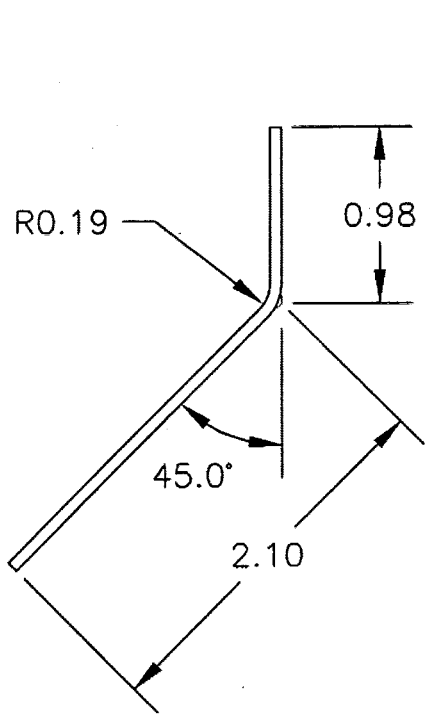

BEND DETAIL

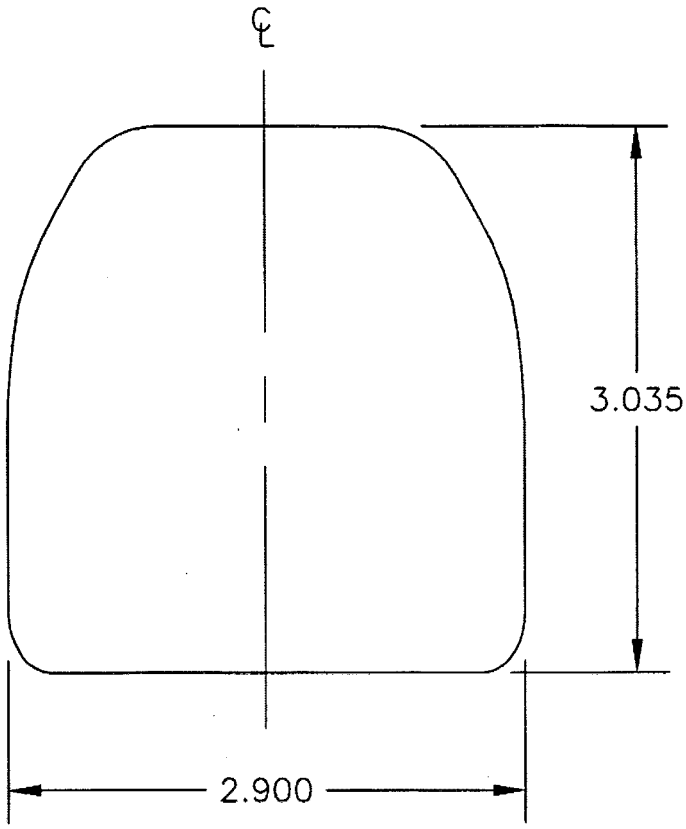

FLAT PATTERN

SHOP COPY
RETURN TO
ENGINEERING
UNCONTROLLED COPY
SUBJECT TO AMENDMENT
WITHOUT NOTICE
WORK ORDER
NO. 45065

MATERIAL: 5052-H32 (QQ-A-250/8) OR
6061-T6 (QQ-A-250/11) 0.063 THICK
TOLERANCES ARE PER DART QSI 018 UNLESS OTHERWISE NOTED
PART IS SYMMETRIC ABOUT CENTERLINE

Copyright 1999 by DART AEROSPACE LTD